SECURIFORT INC

- Tool resistant
- TL-15 UL series bank rated

SECURITY UL LISTED

Made in North America Since 1971

Tool Resistant TL-15 Plate Safe

PC-772-R1

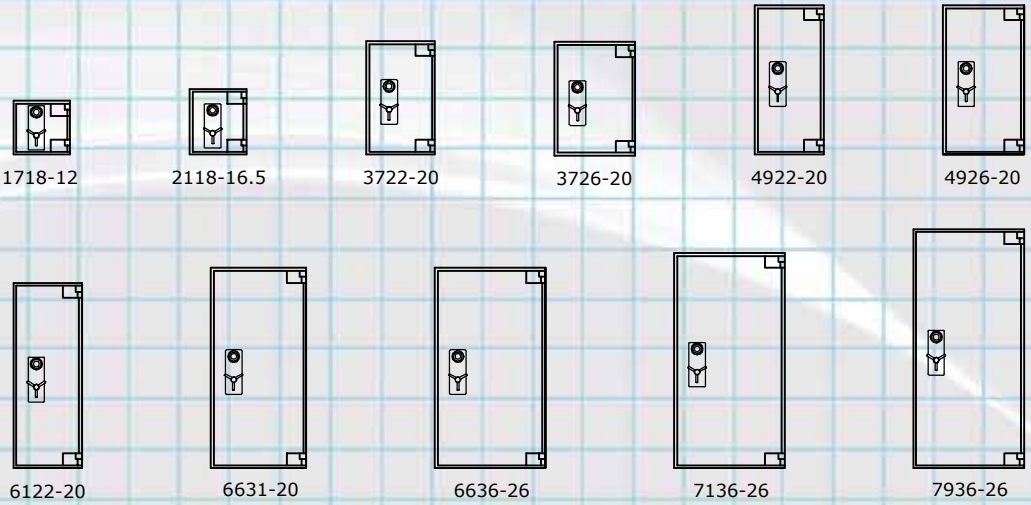

SECURIFORT INC

TOOL-RESISTANT TL-15 PLATE SAFE 1/2" HIGH TENSILE BODY

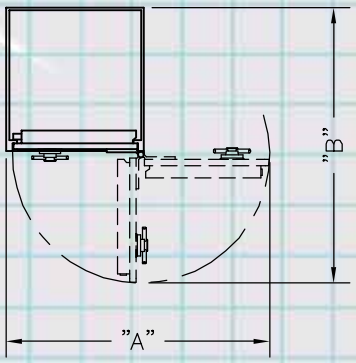

DOOR SWING		
MODELS	DIMENSIONS "A"	DIMENSIONS "B"
1718–12	36"	34 1/2"
2118–16.5	36"	39"
3722–20	44"	47 1/2"
3726–20	52"	51 1/2"
4922–20	44"	47"
4926–20	52"	51"
6122–20	44"	47"
6631–20	62"	56"
6636–26	72"	67"
7136–26	72"	67"
7936–26	72"	67"

** SAFE MUST BE ANCHORED TO FLOOR.
* SAFE HAVE 1" TH. STEEL BACK PLATE.

	MODELS	INSIDE DIMENSIONS HEIGHT	INSIDE DIMENSIONS WIDTH	INSIDE DIMENSIONS DEPTH	OUTSIDE DIMENSIONS HEIGHT	OUTSIDE DIMENSIONS WIDTH	OUTSIDE DIMENSIONS DEPTH	CLEAR OPEN HEIGHT	CLEAR OPEN WIDTH	OVERALL DEPTH	cu. ft. Capacity	WEIGHT	SHELVES QTY
**	1718–12	17"	18"	12"	18"	19"	16 1/2"	15 1/2"	15 1/2"	18 1/2"	2,12	350 lbs	1
**	2118–16.5	21"	18"	16 1/2"	22"	19"	21"	19 1/2"	15 1/2"	23"	3,60	470 lbs	2
*	3722–20	37"	22"	20"	38"	23"	25"	34 1/2"	19 1/2"	27"	9,42	850 lbs	3
*	3726–20	37"	26"	20"	38"	27"	25"	34 1/2"	23 1/2"	27"	11,13	1015 lbs	3
	4922–20	49"	22"	20"	50"	23"	24 1/2"	46 1/2"	19 1/2"	26 1/2"	12,47	970 lbs	4
	4926–20	49"	26"	20"	50"	27"	24 1/2"	46 1/2"	23 1/2"	26 1/2"	14,74	1085 lbs	4
	6122–20	61"	22"	20"	62"	23"	24 1/2"	58 1/2"	19 1/2"	26 1/2"	15,53	1170 lbs	5
	6631–20	66"	31"	20"	67"	32"	24 1/2"	63 1/2"	28 1/2"	26 1/2"	23,68	1570 lbs	5
	6636–26	66"	36"	26"	67"	37"	30 1/2"	63 1/2"	33 1/2"	32 1/2"	35,75	1920 lbs	5
	7136–26	71"	36"	26"	72"	37"	30 1/2"	68 1/2"	33 1/2"	32 1/2"	38,45	2040 lbs	6
	7936–26	79"	36"	26"	80"	37"	30 1/2"	76 1/2"	33 1/2"	32 1/2"	42,79	2300 lbs	6

MEGASAFE
HIGH SECURITY SAFES
(800) 345-6552 www.megasafe.com